MONGO ATTACHMENTS

MICRO • MINI • MIDI • FULL SIZE
EXCAVATOR ATTACHMENTS

BASED IN ELWOOD, IN

USER MANUAL

Mini Pro Hydraulic Mulcher

MP060-14, MP060-17, MP080-17

mongoattachments.com
317-799-1040

TABLE OF CONTENTS

PREFACE 1

OPERATOR'S PERSONAL REQUIREMENTS

PHYSICAL REQUIREMENTS 2
MENTAL REQUIREMENTS 2
OTHER REQUIREMENTS 2
SKILLS 2

MACHINE SAFETY

GENERAL SAFETY REGULATIONS 3
GUARDS AND PROTECTIVE DEVICES 4
DEFINITION OF INDICATIONS 5

DESCRIPTION OF THE MACHINE

GENERAL DESCRIPTION 8
MAIN PARTS 9
MOUNTING PLATES 10
TECHNICAL DATA 10
HAMMERS USED 10

USE OF THE MACHINE: OPERATION

INSTRUCTIONS ON RECEIVING THE MACHINE 11
WARRANTY 11
BEFORE STARTING WORK 12
HITCHING THE MULCHER HEAD TO THE EXCAVATOR 13
MULCHER HEAD HYDRAULIC CONNECTIONS 14
TRANSPORT POSITION AND WORKING POSITION 14
REGULATING THE SPEED OF THE HYDRAULIC MOTOR 15
MACHINE OPERATION 16
INTENDED USE 16
UNHOOKING THE MULCHER HEAD 16
SAFETY MEASURES DURING MACHINE OPERATION 17

MAINTENANCE

GENERAL RULES FOR MAINTENANCE 18
LUBRICANT INFORMATION 18
EXCAVATOR FILTERING ELEMENTS 19
SAFE MAINTENANCE PRACTICES 19
MAINTENANCE CHECKS 19
CLEANING 20

STORAGE

STORING THE MACHINE FOR LONG PERIODS OF INACTIVITY 21
PREPARING THE MACHINE FOR USE AFTER STORAGE 21

TROUBLESHOOTING 22

HYDRAULIC DIAGRAM

HYDRAULIC DIAGRAM OF THE GEAR MOTOR-DRIVEN MULCHER 23

OPTIMAL RPM & TORQUE GUIDE

OPTIMAL ROTOR ROTATION SPEED 24
TORQUE TIGHTENING GUIDE 24

AFTER-SALES SERVICE/SPARE PARTS LISTS

AFTER-SALES SERVICE 25
SPARE PARTS LISTS 25

PREFACE

First of all, keep in mind that everything found on the following pages is advice aimed at achieving the primary objective: safety in the use of the Mini Pro Hydraulic Mulcher, both for the users of the machine and for those around them. Likewise, instructions are given for its correct maintenance and operation.

For these reasons, we encourage you to carefully read this manual, which will provide you with useful tips for using and maintaining the Mini Pro Hydraulic Mulcher. It is a must-read for anyone who is going to use the machine.

If you have any questions while reading the manual, please do not hesitate to contact Mongo Attachments or its authorized distributors.

This manual is considered an integral part of the Mini Pro Hydraulic Mulcher and must accompany it if sold. For this reason, it is advisable to preserve it with care.

This machine must only be handled, maintained, or repaired by people who are aware of the risks involved and who are familiar with the safety regulations in this regard (accident prevention). **The manufacturer is not responsible for the consequences derived from modifications carried out on the Mini Pro Hydraulic Mulcher without its prior and express written authorization**.

This Mini Pro Hydraulic Mulcher is designed to be connected to the front of an excavator. It is designed to clear and shred all kinds of plant debris, including grass, shrubs, and trees of various diameters depending on the model. It does this using the auxiliary hydraulic system from the excavator to which it is connected.

Mongo Attachments is not responsible for the consequences arising from the use of the machine in applications not covered in this document. In these cases, the user assumes entire responsibility for any risks. Correct operation in accordance with the machine's features entails strictly adhering to all manufacturer instructions for handling, maintenance, and repair.

OPERATOR'S PERSONAL REQUIREMENTS

The personnel that handles the machine, and carries out any type of maintenance or repairs to it, must meet the following requirements:

PHYSICAL REQUIREMENTS

- Good eyesight, coordination, and the ability to safely and competently follow the instructions for the correct use of the Mini Pro Hydraulic Mulcher.
- Not being under the influence of any substance (alcohol, drugs, or medication) that may impair physical or mental faculties.

MENTAL REQUIREMENTS

- Ability to understand and logically apply this manual, as well as the safety rules and precautions.
- Ability to adhere and use good judgment for your own safety and the safety of others.
- Ability to monitor work in a capable and responsible manner.

OTHER REQUIREMENTS

- Ability to handle machines.
- Ability to understand safety and danger indication diagrams and signs.

SKILLS

- Ability to operate the excavator that the Mini Pro Hydraulic Mulcher will be connected to. The user must have current and valid training on that excavator.

IMPORTANT: Remember to only use implements that are in perfect condition and that meet current safety regulations. Remember that your safety depends on you; taking proper safety precautions can save you from having to take sick leave as a result of an accident. Proper safety precautions can also help you avoid major injury or death.

MACHINE SAFETY

GENERAL SAFETY REGULATIONS

When using machinery, you must always be aware that they have moving parts that can cause very serious damage, both physical and material. Any operator who uses the Mini Pro Hydraulic Mulcher must take into account the following general safety regulations:

- Before starting the machine, this manual must be read carefully.
- Pay close attention to all sections of the manual, especially those where it is emphasized with warning pictograms. Lack of attention is a frequent cause of accidents.
- The Mini Pro Hydraulic Mulcher designed and manufactured by Mongo Attachments is a machine **designed to be connected to the front of an excavator. It is designed to clear and shred all kinds of plant debris, including grass, shrubs, and trees of various diameters depending on the model**. It does this using the auxiliary hydraulic system from the excavator to which it is connected. Any use that is not for that purpose or a non-compliant use of the same, is a serious infringement of the safety regulations, for which the manufacturer will not be responsible for possible damages or losses derived from it.
- The Mini Pro Hydraulic Mulcher must only be handled by trained personnel who have previously read this manual.
- Before carrying out any work on the machine, familiarize yourself with all the control devices installed in the excavator. After starting the work is too late.
- Make sure that there are no people near the machine during normal operation.
- Make sure that the driver of the excavator is aware of the different risks that the machine presents and has read this manual.
- Loose fitting clothing and appropriate safety footwear should be worn.
- Wear suitable gloves for handling any part of the machine.
- Never carry out, for any reason, repair or maintenance operations with the excavator that is connected to the Mini Pro Hydraulic Mulcher in operation. Both the machine and the excavator must remain absolutely stable and not running or moving.
- Carefully read the rules and regulations indicated in the pictograms on the machine. Make sure that these pictograms are in good condition and that they are legible.
- Do not force the controls or the working capacity of the machine.
- Carry out the maintenance of the Mini Pro Hydraulic Mulcher according to this manual.
- Do not wait for any part of the machine to break before proceeding with its repair/replacement. If you have questions about any type of repair, contact Mongo Attachments.
- Clean the machine as directed. Do this regularly to prevent parts from degrading more than expected.

MACHINE SAFETY

GUARDS AND PROTECTIVE DEVICES

ILLUSTRATION	DESCRIPTION
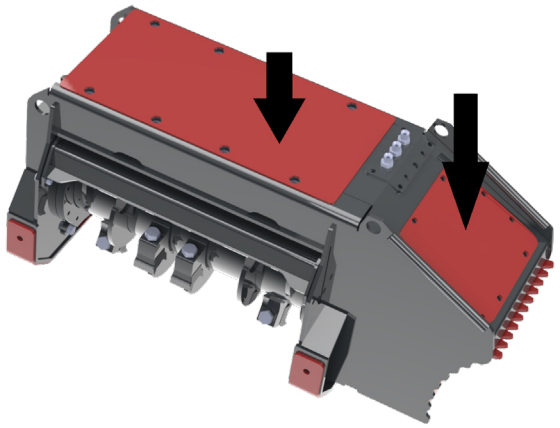	The Mini Pro Hydraulic Mulcher has two covers meant to protect the hydraulic components and the hydraulic motor of the machine.
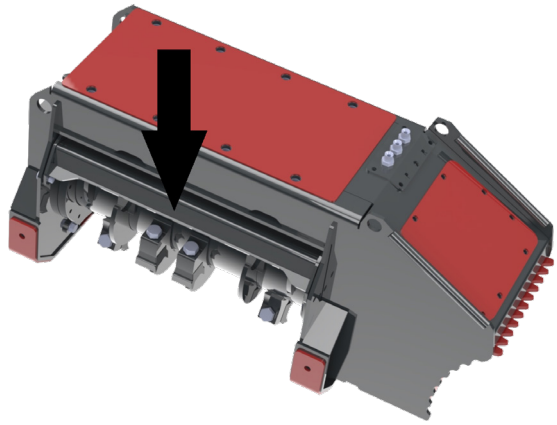	The Mini Pro Hydraulic Mulcher features a lid that keeps the discharge of the shredded debris nearby the machine during operation.
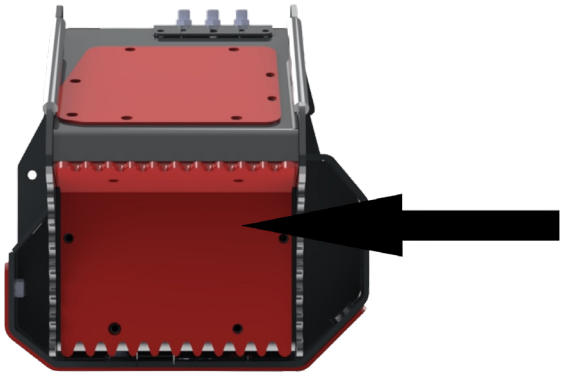	The Mini Pro Hydraulic Mulcher has a cover plate that protects the drive and the hydraulic motor and is meant to protect operators from possible injuries.

* The design and positioning of the above elements may vary according to the model purchased.

MACHINE SAFETY

DEFINITION OF INDICATIONS

Users are warned, through the use of pictograms, about the risks existing in the use of this machine. These pictograms provide information of vital importance and indicate mandatory compliance during any direct interaction of the operator with the machine. To inform of these dangers, the machines are marked with the following warning pictograms:

NO.	PICTOGRAM	DESCRIPTION
P1		Carefully read the User Manual before handling the machine.
P2		Danger of running over or impact by the excavator during normal machine operation and during transport or maintenance. Leave a reasonable safety distance.
P3		Danger of snagging and shearing with the excavator hitching points when hitching/unhitching the machine. Be extremely careful during any interaction with these parts of the machine.
P4		Danger of snagging or entrapment with the machine's transmission belts and pulleys when operating or servicing the machine.
P5		Danger of cutting, severing or shearing with the machine's hammer shaft when operating or servicing the machine. Take extreme care during any interaction with this part of the machine.

MACHINE SAFETY

NO.	PICTOGRAM	DESCRIPTION
P6		Danger of entrapment or entanglement with the machine's transmission belts and pulleys when operating or servicing the machine. Be extremely careful during any interaction with these parts of the machine.
P7		Danger of crushing by the machine when operating, transporting or servicing the machine. Leave a reasonable safety distance.
P8		Caution against the risk of burns due to high temperatures, which may be generated by the motor and the machine's hydraulic system components.
P9		Unpleasant noise produced by the machine during normal operation.
P10		Danger of bursting hydraulic hoses. The User and Maintenance Manual must be read carefully before carrying out any repairs.
P11		Warns of the danger of material projection at high speed during normal machine operation. A reasonable safety distance of 100m must be kept with the machine (328ft).

MACHINE SAFETY

In addition, every person who operates the machine must be protected against unforeseen dangers, which is why they must use the Personal Protection Equipment (PPE) described below:

NO.	PPE	DESCRIPTION
PPE 1		The use of safety footwear is mandatory when handling the machine and when standing near it.
PPE 2		The use of gloves is mandatory while interacting with the machine, especially during its maintenance.
PPE 3		The use of acoustic protection is mandatory during normal operation of the machine, even for people in the vicinity of the machine.
PPE 4		The use of suitable clothing for work is mandatory both in the normal operation of the machine and in its maintenance.
PPE 5		The use of a helmet and glasses is mandatory in the event of using an excavator without an enclosed cab during normal machine operation.

IMPORTANT: Keep the pictograms in good condition. If they become damaged or deteriorate, the owner must replace them immediately.

DESCRIPTION OF THE MACHINE

GENERAL DESCRIPTION

The Mini Pro Hydraulic Mulcher is a machine designed to be mounted with a mounting plate to the arm of an approved excavator.

The MP060-14, MP060-17, and MP080-17 models are designed to be connected to the arm of an excavator. Their function is to clear shrubs, branches and trees up to a maximum diameter of 3 inches depending on the model chosen. The Mini Pro Hydraulic Mulcher fits excavators in the range of 1.5 to 4 tons.

Before starting normal operation, you must do the following:

- Connect the Mini Pro Hydraulic Mulcher to the excavator with the coupling system installed for this purpose.
- Connect the Mini Pro Hydraulic Mulcher's hydraulic system to the hydraulic connections on the excavator using the hydraulic hoses.

The Hydraulic Mulcher is composed of various sub-assemblies: The chassis, the mounting plate, the motor and hydraulic system, the hammer shaft, the side skids and the safety guards. Depending on the chosen model, these elements may vary in both design and placement.

The Mini Pro Hydraulic Mulcher models are coupled to the arm of an excavator using a mounting plate installed on the machine specifically for this purpose. The process of securing the machine to the excavator is fully detailed in the section titled HITCHING THE MULCHER HEAD TO THE EXCAVATOR on page 13 of the User Manual.

The hydraulic system on the Hydraulic Mulcher is connected to the hydraulic connections on the excavator.

The primary elements built into the Mini Pro Hydraulic Mulcher includes the hammers attached to the hammer shaft on the lower part of the machine chassis.

The hammers on the rotor are designed to clear and shred all kinds of surface vegetation that is encountered as the excavator proceeds. The rotary movement of the hammer shaft is produced due to the hydraulic motor installed on the upper right part, the transmission system, and the hydraulic hoses connected between the Mini Pro Hydraulic Mulcher and the excavator.

The Mini Pro drive system is a direct drive system that consists of a hydraulic motor connected to the rotor shaft.

The machine also includes a protective guard attached to the motor and hydraulic system designed to protect the operator from any liquids that may be sprayed out at high pressure (hydraulic oil), plus another protective guide attached to the pulley-belt system designed to protect the operator from entanglement, entrapment or dragging.

DESCRIPTION OF THE MACHINE

MAIN PARTS

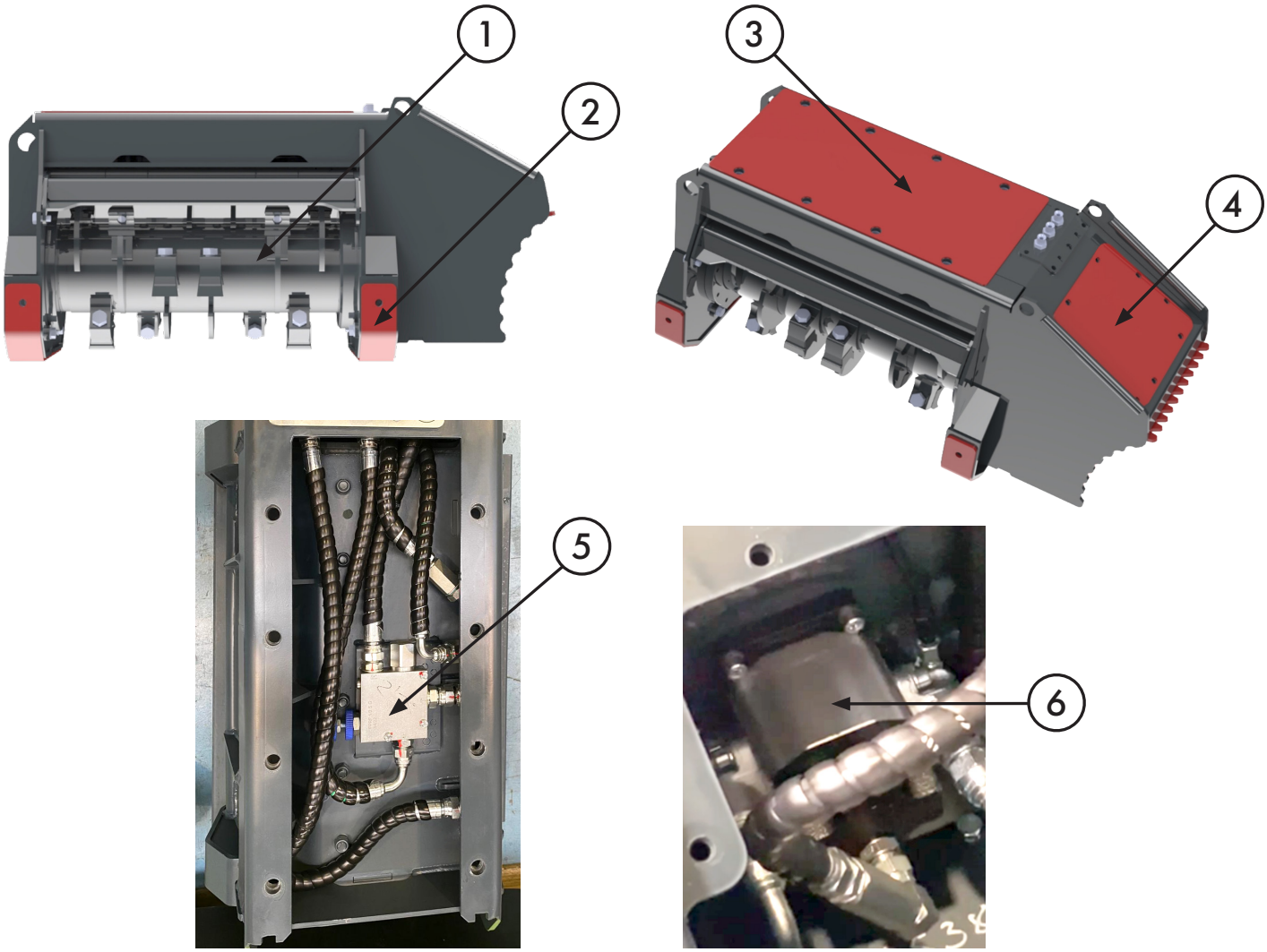

Image 1. *Images of the Mini Pro Hydraulic Mulcher showing the main parts.*

NO.	COMPONENT
1	Rotor
2	Skids
3	Top cover
4	Top motor cover
5	Flow regulator
6	Hydraulic motor

DESCRIPTION OF THE MACHINE

MOUNTING PLATES

The MP060-14, MP060-17, and MP080-17 models are supplied with a mounting plate with various holes for attaching the heads to the hitch on the excavator's arm. The layout of these holes shall vary according to the model chosen. This will be fitted with the appropriate mount for your excavator and will be built to the specs agreed upon by the customer and Mongo Attachments.

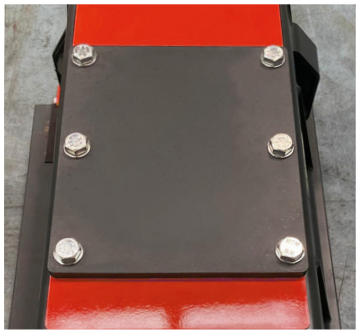

Image 2. *Image of the mounting plate.*

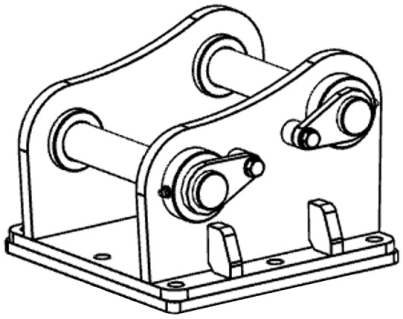

Image 3. *Image of a custom hitch.*

TECHNICAL DATA

MODEL	WEIGHT WITHOUT MOUNT	MOTOR	MOTOR SIZES (CC)	OIL FLOW (GPM)	PSI RATING (WHILE FLOWING)	RPM RANGE	MINIMUM EXCAVATOR WEIGHT	# OF TEETH	CUTTING WIDTH	CUTTING DIAMETER
MP060-14	520 lbs	Gear Motor Aluminum Casing	14	10-11	2900	2300-2500	1.5 T	12	24″	2.5″
MP060-17	520 lbs	Gear Motor Aluminum Casing	17	12-14	2900	2400-2600	1.5 T	12	24″	3″
MP080-17	606 lbs	Gear Motor Aluminum Casing	17	12-14	2900	2400-2600	1.5 T	16	32″	3″
- MAX EXCAVATOR FLOW OF 20 GPM -										

HAMMERS USED

This mulcher head was designed, conceived, and manufactured to clear and shred all kinds of plant debris. This debris may be grass, shrubs or trees of various diameters.

REF	IMAGE	DESCRIPTION
MTR2108		F10 fixed forestry hammer.

USE OF THE MACHINE: OPERATION

To start up and operate the mulcher head, follow the instructions in the sections below.

INSTRUCTIONS ON RECEIVING THE MACHINE

Check the Mini Pro Hydraulic Mulcher for shipping damage or missing parts. Claims will only be accepted if they are made immediately upon receiving the machine and are always confirmed by the carrier or the transport agency. Check that the machine has all safety protections in place. Otherwise, please notify Mongo Attachments immediately. Under no circumstances should you use the machine if any protective devices are missing.

WARRANTY

Mongo Attachments, LLC (hereinafter referred to as "Mongo Attachments" or "Mongo") warrants that all equipment manufactured and delivered by Mongo Attachments will be free from defects in material and workmanship for a period of one year from the date of purchase ("Warranty Period") of said equipment, except for as stated in this Warranty.

This Warranty does not apply to: 1) any item of equipment which has been improperly stored, installed, operated or maintained or which Buyer has itself modified, replaced, adjusted, or repaired or permitted modification, replacements, adjustments, or repairs by third persons, without the consent of Mongo Attachments; 2) any item of equipment which has been reconstructed, repaired or altered by Persons other than Mongo Attachments or an authorized representative of Mongo Attachments; 3) equipment failure resulting from the use of non-Mongo produced replacement parts, or from installation and use of add-on, modified, or unapproved accessories; 4) any item of equipment subjected to abuse, misuse, neglect, negligence, accident, recklessness, improper testing, improper handling, abnormal physical stress, abnormal environmental conditions or use contrary to any instructions issued by Mongo Attachments; 5) wear and tear as a result of normal use, including but not limited to teeth, tines, blades, belts, powder coating finish, hoses and their fittings; 6) equipment failures caused by weather, Buyer's storage practices, contamination, or use of unapproved coolants, lubricants, or chemicals; cosmetic issues such as scrapes, scratches, dents, or worn painted surfaces; and 7) other items and conditions as determined by Mongo Attachments.

Notwithstanding the above exceptions, if any item of equipment shall prove defective in material or workmanship during the above Warranty Period, Buyer shall notify Mongo Attachments within thirty (30) days of failure of the equipment or discovery of defect by contacting an authorized Mongo Attachments dealer to arrange inspection of the equipment. An inspection by an authorized Mongo Attachments dealer or a direct inspection by Mongo Attachments shall then occur. If found to be defective, Mongo will approve the warranty claim. Upon approving the warranty claim, Mongo Attachments can, at its option, adjust, modify, repair or replace said defective equipment or equipment part. Mongo shall have the option to return the equipment to the site of manufacture, F.O.B., to make necessary repairs or to make such adjustment, modification or repair at the point of installation.

USE OF THE MACHINE: OPERATION

Prior to repair or replacement, proof of purchase must be provided, or warranty claim will be automatically denied. In the event Buyer disagrees with the assessment of the equipment by the authorized Mongo Attachments dealer, Buyer may contact Mongo Attachments to request further review. Mongo Attachments reserves the right, but not the obligation, to review the determination made by the authorized dealer and affirm or deny its decision.

BUYER AND MONGO AGREE THAT, IN CONSIDERATION OF THE ABOVE WARRANTY, ALL OTHER WARRANTIES AND GUARANTEES, OTHER THAN TITLE, EITHER EXPRESS OR IMPLIED, WHETHER ARISING UNDER LAW OR EQUITY OR COURSE OF DEALING OR CUSTOM OF TRADE, INCLUDING WARRANTIES OF MERCHANTABILITY AND FITNESS FOR A PARTICULAR PURPOSE ARE EXCLUDED FROM THIS CONTRACT.

The sole liability of Mongo and the exclusive remedy of Buyer arising out of the manufacture, sale, or furnishing of equipment hereunder or its use, whether arising under contract, tort (including negligence), strict liability or otherwise, shall be the modification, adjustment, repair or replacement of the item of equipment, or component thereof. In no event shall Mongo be required to return or refund the purchase price of the defective equipment. Mongo Attachment's liability shall not exceed the purchase price of the defective item. Any services, repairs or replacement parts performed by Mongo or given to Buyer under this warranty shall be credited against Mongo's maximum liability. Warranty void outside of Canada and the United States.

BEFORE STARTING WORK

Before moving or working with the machine, the following checks will be carried out in order to check the correct operation of the machine:

- Carefully read this Manual in its entirety.
- Check that the weight of the machine does not hinder maneuverability of the excavator and check that it does not exceed the excavator's structural capacity.
- Mongo Attachments recommends the use of an excavator with an approved cabin for the work to be carried out.

WARNING: In the event of only having an anti-roll bar, it is mandatory to install a protective screen made of a material resistant to impacts, in such a way that it can prevent any projection derived from the use of the machine from reaching the driver of the excavator that carries the machine.

- Check the integrity of the hydraulic connections. If there's a worn or damaged hose, it's the user's obligation to replace it with a new one.
- Check the oil level in the excavator's hydraulic system. If the oil level is insufficient, oil must be added to reach the level recommended by the manufacturer.
- Check that the excavator controls move the machine as described.

USE OF THE MACHINE: OPERATION

- Make sure there is no one around the machine.
- Check that there is no friction between the various components and that all the elements are correctly fixed.
- Make sure that all the components of the Mini Pro Hydraulic Mulcher are present and intact.
- Ensure the machine's guards and protection devices are present, in satisfactory condition, and are properly fastened. The work should not begin unless the guards are in place and securely fastened.
- Perform a visual examination of the entire machine to detect possible oil leaks, surface damage, and/or breakage of pieces or parts.
- Any defect detected after due inspections must be corrected before starting the excavator.
- Ensure that the machine is connected to an excavator with adequate power for the selected Mini Pro Hydraulic Mulcher model as defined in the section titled TECHNICAL DATA on page 10 of the User Manual.
- Place the machine in the transport or work position depending on the user's intention, as defined in the section titled TRANSPORT POSITION AND WORKING POSITION on page 14 of the User Manual.
- Before starting to work with the Mini Pro Hydraulic Mulcher, you should survey the for any obstacles that could be dangerous. If they exist, it will be necessary to flag in order to avoid them during the work.
- No one should get on the machine when it is moving, at the time of work, or when the excavator's engine is running.

HITCHING THE MULCHER HEAD TO THE EXCAVATOR

When coupling the mulcher head to the excavator, special care must be taken not to get trapped between the excavator and the machine and not to get caught or injure any part of the body. Appropriate safety gloves must be worn at all times when interacting with the machine and the following procedures must be followed on all occasions. First, ensure that the mount is correctly attached to the machine with the respective nuts and bolts.

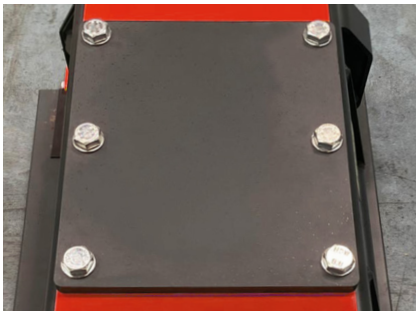

Image 4. *Image of the mounting plate.*

Next, connect the hydraulic hoses on the Mini Pro Hydraulic Mulcher to the hydraulic system on the excavator, ensuring both elements are properly connected.

IMPORTANT: When lining up the holes on the machine's and the excavator's hitching platforms, make sure that the rows of holes on both are facing the same way.

Finally, perform a visual inspection to ensure that there is no hydraulic oil leakage and that all major components, such as bolts, are properly positioned and fastened.

USE OF THE MACHINE: OPERATION

MULCHER HEAD HYDRAULIC CONNECTIONS

The Mini Pro Hydraulic Mulcher is equipped with a set of hydraulic hoses that are specifically designed to connect to the excavator's hydraulic circuit. The specific configuration of the hoses will vary depending on the options selected. Determine the pressure (P) and return (R) hoses.

Image 5. *Hydraulic ports for connecting the hydraulic hoses.*

NO.	IMAGE	DESCRIPTION
NB48		Return Hose.

Establish a hydraulic connection between the machine and the excavator. Connect the mulcher head's hoses with the corresponding hoses on the excavator.

TRANSPORT POSITION AND WORKING POSITION

TRANSPORT POSITION: Once the machine is hitched to the excavator, adjust the position of the excavator's hydraulic arm so that the mulcher head is no longer in contact with the ground and does not obstruct the driver's view, leaving enough space between the excavator and the machine to avoid contact during transport.

The excavator's arm should be fully retracted to ensure that the mulcher head does not protrude during transport. Additionally, the hydraulic motor should be completely shut down, as should all of the mulcher head's components.

Next, a visual check must be carried out to ensure that there are no loose or damaged parts that could pose a risk during the machine's transportation. Finally, the machine can be transported.

WARNING: While driving, it is mandatory to drive with the machine in the transport position and with the safety chain correctly located, as described in the section titled HITCHING THE MULCHER HEAD TO THE EXCAVATOR on page 13 of the User Manual. You must always drive in compliance with the highway code.

WORK POSITION: The hydraulic arm on the excavator will be lowered until the machine's side skids are just off the ground. In this position, the hydraulic motor can drive all the mobile components on the mulcher head, and therefore the hammer shaft.

USE OF THE MACHINE: OPERATION

REGULATING THE SPEED OF THE HYDRAULIC MOTOR

The hydraulic motor is regulated at the factory before delivery to ensure it runs correctly. There is no need to adjust it once it is installed in the excavator.

The element used to regulate the rotation speed of the hydraulic motor and the cylinders for auxiliary functions is the Flow Regulator built into the mulcher head, which is mounted inside the machine. To grant access to the regulator, remove the lid shown in Image 6.

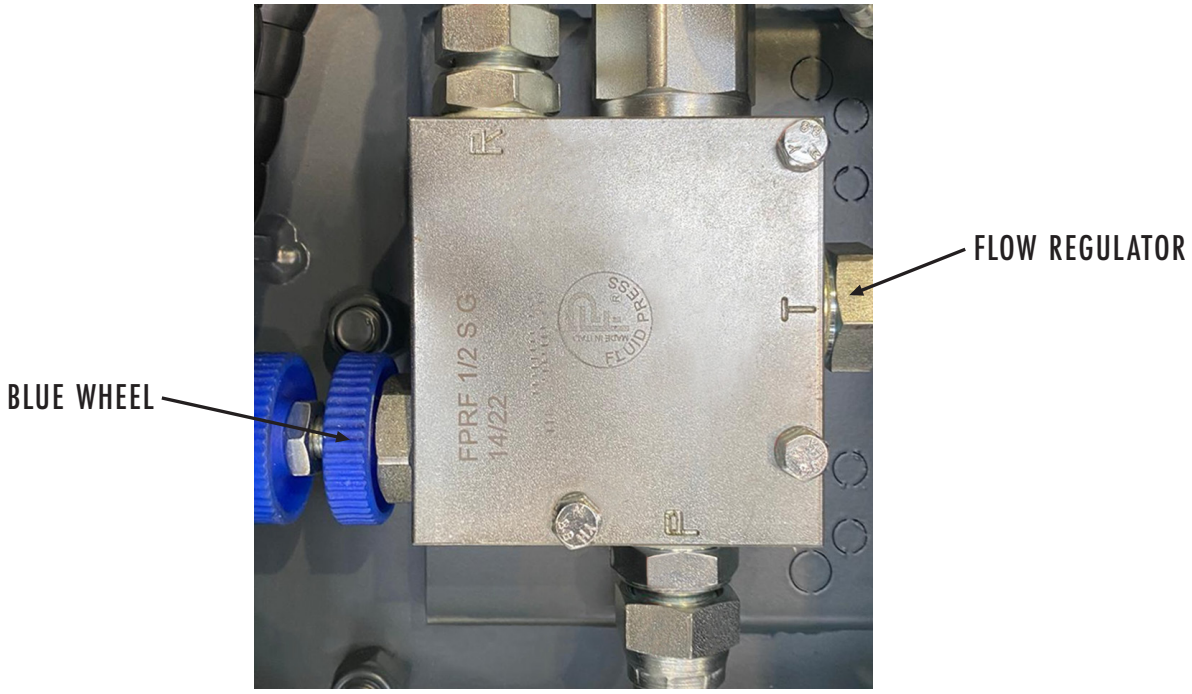

Image 6. *Image of the flow regulator system.*

INCREASE FLOW: turn the blue wheel counterclockwise to increase the working speed of the machine's hydraulic motor.

DECREASE FLOW: turn the blue wheel clockwise to reduce the working speed of the machine's hydraulic motor.

IMPORTANT: You can consult the rotation speeds in the section titled OPTIMAL ROTOR SPEED on page 24 of the User Manual.

USE OF THE MACHINE: OPERATION

MACHINE OPERATION

Prior to starting work, the machine's condition should be carefully checked, especially the items most exposed to wear and tear and those that fulfill safety functions, such as protective guards, hydraulic hoses, and bolts. At the same time, it should be verified that there are no nearby objects, people, or animals that could interfere with the machine's proper operation by trying to anticipate the movements of the excavator and the machine.

To start the work, once it has been verified that there are no risks, the controls of the excavator's hydraulic circuit can be initiated, placing them in the required working position, following what is described in the section titled TRANSPORT POSITION AND WORKING POSITION on page 14 of the User Manual. Once this step has been completed, you can start working with the machine.

Once the work is finished, the mulcher must be returned to the transport position before it can be driven along public roads or highways.

INTENDED USE

The Mini Pro Hydraulic Mulcher was designed, conceived, and manufactured with the purpose to clear and shred all kinds of plant debris. This debris includes grass, shrubs, or trees of various diameters. It works using the hydraulic system of the excavator that it is connected to.

It is absolutely forbidden to transport the mulcher head without first placing it in its transport position, as described in the section titled TRANSPORT POSITION AND WORKING POSITION on page 14 of the User Manual, or without being securely attached to a trailer.

The use of the mulcher head for the transport of materials, people, or animals is not allowed.

It is completely prohibited to disassemble the machine's safety devices.

UNHOOKING THE MULCHER HEAD

Before unhooking the machine, it should be in the transport position, as described in the section titled TRANSPORT POSITION AND WORKING POSITION on page 14 of the User Manual.

To carry out this operation, ensure that the ground on which the machine will be supported is level to fully guarantee the stability of the mulcher head.

After ensuring that the ground is suitable, turn off the excavator and use the hydraulic control levers to ensure that the mulcher head is properly supported. Once its stability has been verified, activate the hydraulic control levers again, this time with the aim of eliminating the pressure inside the hydraulic lines.

USE OF THE MACHINE: OPERATION

Now, you can disconnect the hydraulic hoses that connect the mulcher head's hydraulic system with the excavator's hydraulic system. Do not let these touch the ground, since the hydraulic connection nozzles must always remain nice and clean for later use.

Finally, unhook the machine from the excavator. This procedure is exactly the same (except in the opposite direction) as that described in the process for attaching the mulcher head.

It is highly recommended to check after each use of the mulcher head that it has not been damaged during work. Furthermore, it is also recommended to always store the machine in a dry garage or warehouse, protected from inclement weather, thus extending its lifespan.

SAFETY MEASURES DURING MACHINE OPERATION

- Do not use on slopes of more than 8.5º (14%). Work should never be carried out in a transverse direction.
- Never handle any mechanism on the mulcher head without first turning off the excavator motor and removing the hydraulic pressure from the circuits.
- In the event of identifying any item in poor condition, repair it and/or replace it with a new one. Once corrected, work can be restarted.
- If any severe vibrations occur and the cause is not identified, please contact Mongo Attachments.
- Appropriate safety footwear, eye-wear, ear protection, and clothing should be worn when operating the machine. Avoid standing in the vicinity of the machine when it is in use.
- When using an excavator without a cabin, always wear a safety helmet and protective shield when operating the equipment and for any interaction with the machine.
- Contact with high-pressure hydraulic fluids must be avoided at all costs. This type of leak has the potential to do significant damage to the human body. In the event of an incident involving hydraulic oil, a doctor should be contacted immediately. To avoid harm in the event of a leak, you must always wear appropriate safety gloves.
- When the machine is in operation, no one should be within 150 feet of it. They risk being hit by stones or plant debris thrown at high speeds.

MAINTENANCE

Taking care of the mulcher head can extend its lifespan. This section explains how to properly and safely care for your machine. Maintenance, such as lubrication and adjustments, must be performed by qualified and trained personnel.

GENERAL RULES FOR MAINTENANCE

- Always carry out maintenance operations with the machine perfectly stable, immovable, and braked, whether or not it is attached to the excavator. This restriction is in place to prevent any sudden movement that could endanger the operators while performing maintenance operations.
- The hydraulic hoses should be disconnected from the excavator's hydraulic sockets.
- Strictly follow the safety standards for maintenance, as these jobs are not risk-free. Do not neglect the use of Personal Protection Equipment.
- It is recommended to thoroughly grease the machine after maintenance and before daily use. Do NOT use "Red & Tacky" or Lithium Grease.
- It is recommended to regularly carry out maintenance operations and inspections.
- Ensure adequate lighting when performing maintenance tasks. If natural light is insufficient, artificial lighting must be provided in areas with poor visibility to reduce the risk of snagging or impact with the machine.
- If welding has to be done, first disconnect any electrical items that are in contact with the machine. Next, sand the area on the attachment that you plan to weld until the paint is completely removed. If the paint is not removed before welding begins, the gases released would be toxic. A mask must be worn, and the work area must be perfectly ventilated.
- Be aware that any modification to the machine is prohibited, as it could affect the user's safety. Modifications can only be made with the express written consent of Mongo Attachments. Any modification made without said consent, entails the cancellation of the warranty.

IMPORTANT: Do not carry out any type of maintenance or interact directly with the machine while it is in operation.

LUBRICANT INFORMATION

NLGI Grade 2 lubricants and ISO 46 HLP hydraulic oils should be used on the Mini Pro Hydraulic Mulcher.

We suggest using Schaeffer 219 Grease.

MAINTENANCE

EXCAVATOR FILTERING ELEMENTS

To ensure optimal operation and extend the service life of the mulcher head, the carrier machine must have a filtration system that complies with the ISO 4406 20/18/15 standard (equivalent to NAS1638-9). This standard ensures that the hydraulic oil used is clean and free from contaminant particles. This will prevent the components inside the head from degrading prematurely, which could lead to costly repairs and downtime.

SAFE MAINTENANCE PRACTICES

To carry out maintenance of the machine safely, the following aspects must be considered:

- Understand the maintenance procedures before starting any work.
- Ensure that all the machine's safety devices and protective guards are in the correct position and in good condition.
- Check the structural integrity of the various machine components.
- Carry out maintenance operations after cleaning all the parts of the machine.
- Never lubricate, carry out maintenance operations, or adjust the machine while it is in operation.
- Keep all parts in good condition and properly installed.
- Repair visible damage immediately: replace worn or broken parts.
- Remove all accumulations of grease or residue.

MAINTENANCE CHECKS

It is recommended that the following actions and checks are routinely performed:

1. Make sure the protection guards are in good condition and fixed properly.
2. Regularly check the hammers, the motor, and the hydraulic system. In the event of wear or breakage, they should be repaired or replaced.
3. Before starting up the machine, always check the oil levels of the excavator.
4. After the first two hours of operation, re-tighten all the bolts on the machine.
5. The condition of the hydraulic hoses should be checked periodically, at least twice a year. They must not have cracks, (generally produced by ultraviolet rays), nor friction or cuts. In the event of any anomaly, it is mandatory to replace the damaged hoses with new equivalent ones. Non-replacement may lead to an unexpected explosion, usually when working, with a high chance of causing a serious accident. Don't hesitate, be proactive.

MAINTENANCE

6. Make sure that the motor and the hydraulic system are not leaking oil. If this is the case, you must contact Mongo Attachments, who will advise you what to do in each case.
7. The areas that become worn and suffer chipping paint, must be repainted. Otherwise, weather effects will aggravate the wear and tear and affect the structural integrity of the attachment.
8. Lubricate both sides of the rotation shafts of the hammer shaft on the mulcher every 40 hours, as shown in the image below.

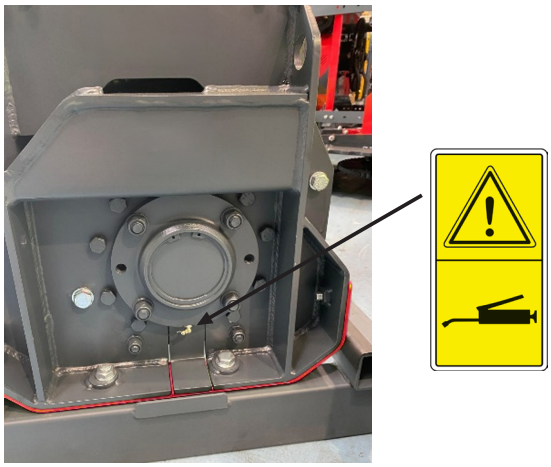

Image 7. *Rotor hub greasing nipple*

CLEANING

In order to enjoy your machine for many years to come, please note the following cleaning requirements:

- A clean machine is a safe machine.
- A clean machine is ready to work.
- A clean machine is a long-lasting machine.

It is recommended to clean the machine after each working day. You should not use abrasive products, solvents, metal cleaners, detergents or diluted products. If a pressurized water cleaning system is used, a general greasing must be carried out at the end. You must also dry the different components and points where stagnant water may remain using a cloth or pressurized air.

Cleaning must be carried out with the machine completely stopped and after having ensured its stability.

REMEMBER: Keeping the machine in good condition will mean better performance as well as a longer life. Clean thoroughly, removing guards and easy-to-assemble/disassemble elements, at least once a year.

STORAGE

STORING THE MACHINE FOR LONG PERIODS OF INACTIVITY

To store the machine for a long period of inactivity without deterioration, follow the steps and tips below:

- Clean the machine thoroughly.
- Clean more thoroughly the areas that, due to their difficult access, are not cleaned frequently.
- Remove any used grease that has accumulated and clean the surfaces thoroughly.
- Carry out a new general greasing in all the moving parts, with new quality grease.
- Store the machine in a warehouse with a clean and dry atmosphere.

PREPARING THE MACHINE FOR USE AFTER STORAGE

Before using the machine again after long storage, you should follow the steps below:

- Perform a visual and general examination of all parts of the machine.
- Hook the mulcher head to your excavator, as described in the section titled HITCHING THE MULCHER HEAD TO THE EXCAVATOR on page 13 of the User Manual.
- Check the correct operation of the mulcher head, testing the different mechanisms that compose it, as stated in section MACHINE OPERATION on page 16 of the User Manual.

TROUBLESHOOTING

Many problems can be easily resolved once the reason is identified. The table below shows the most frequent problems that the machine may present, as well as the causes and solutions.

PROBLEM	CAUSE	SOLUTION
The machine is hitched to the excavator with the hydraulic hoses connected but the hydraulic motor doesn't respond to the activation of the control devices	Hydraulic motor failure	Contact Mongo Attachments to replace it with another one with the same technical characteristics.
	Lack of oil in the excavator's hydraulic circuit	Check the oil level of the excavator and, if it is insufficient, top it up to the level indicated by the manufacturer.
	Oil leak in the hydraulic circuit	Check all the hydraulic circuit hoses. In the event that any of the hoses are broken, they must be replaced.
	The excavator's hydraulic system is depressurized	Check the pressure of the hydraulic circuit.
The machine is hitched to the excavator with the hydraulic hoses connected but the hydraulic cylinder on the mounting plate doesn't move	Oil leak in the hydraulic circuit	Check all the hydraulic circuit hoses. In the event that any of the hoses are broken, they must be replaced.
	The excavator's hydraulic system is depressurized	Check the pressure of the hydraulic circuit.
The machine is vibrating	One of the hammers is worn or broken	Check the condition of the lower hammers. If they are worn or broken, please contact Mongo Attachments to replace them with alternatives that have the same technical characteristics.

HYDRAULIC DIAGRAM

HYDRAULIC DIAGRAM OF THE GEAR MOTOR-DRIVEN MULCHER

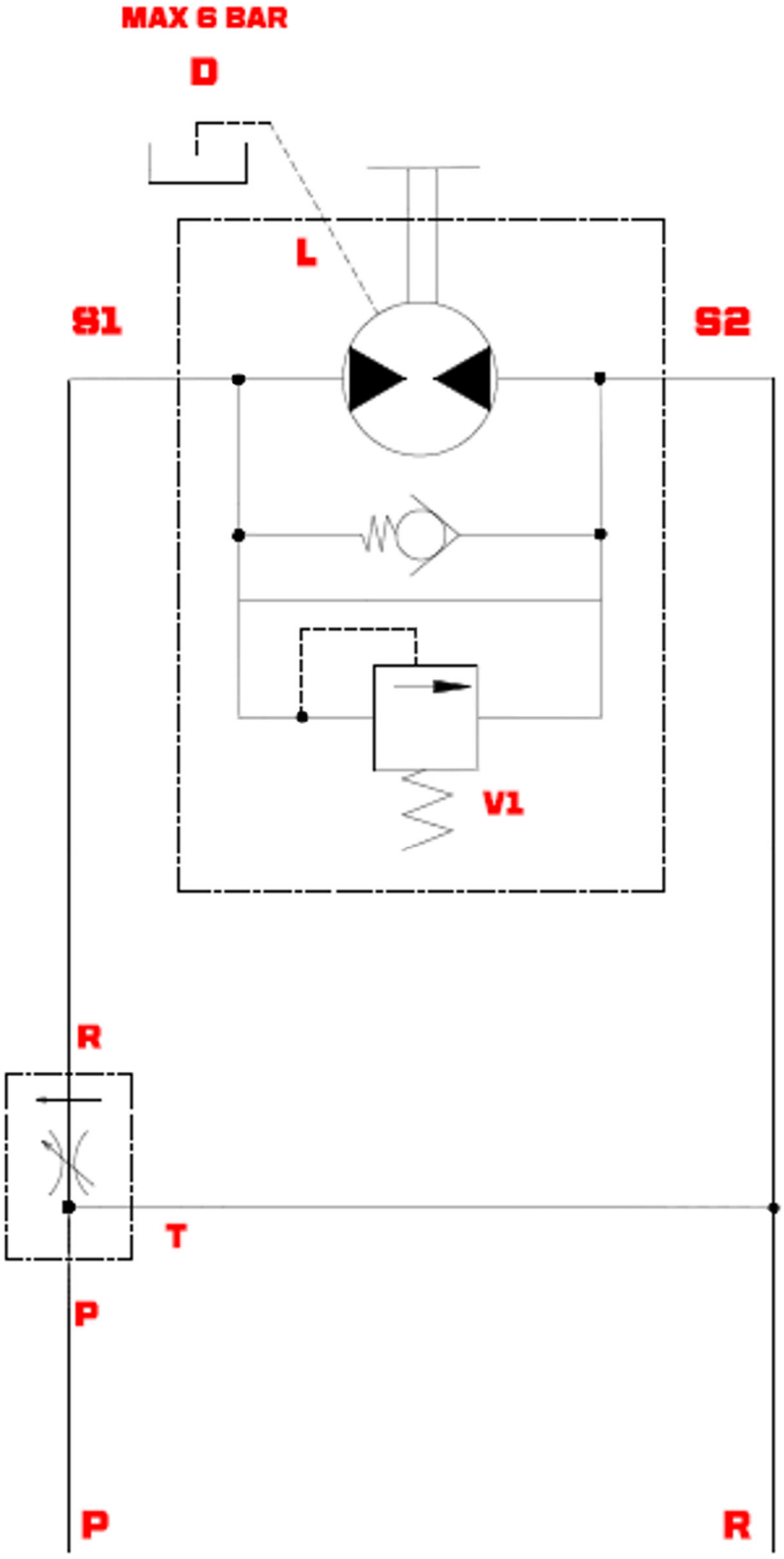

OPTIMAL RPM & TORQUE GUIDE

OPTIMAL ROTOR ROTATION SPEED

As described in the section titled REGULATING THE SPEED OF THE HYDRAULIC MOTOR on page 15 of the User Manual, the Mini Pro Hydraulic Mulcher is already regulated in the factory before delivery and should not be adjusted without express authorization from Mongo Attachments. The table shows the optimal roller rotation speeds. These values refer to the models with hydraulic motors installed as standard. For mulcher heads manufactured with optional motors, check Mongo Attachments.

MODEL	RPM ROLLER
MP060-14	2300-2500
MP060-17	2400-2600
MP080-17	2400-2600

TORQUE TIGHTENING GUIDE

Bolt Diameter (mm)	Head/Wrench Size (mm)			Recommended Torque Spec (N.m)		Recommended Torque Spec (Ft.lb)		Recommended Torque Spec (Inch pounds)	
	ANSI/ISO	DIN	JIS	Class 8.8	Class 10.9	Class 8.8	Class 10.9	Class 8.8	Class 10.9
5	8	8	8	7	9	5	7	62	80
6	10	10	10	12	16	9	12	106	142
8	13	13	12	30	40	22	29	266	354
10	16	17	14	55	75	41	55	487	664
12	18	19	17	100	135	74	100	885	1195
14	21	22	19	160	215	118	159	1416	1903
16	24	24	22	245	335	181	247	2168	2965
20	30	30	-	480	650	354	479	4248	5753

Bolt Diameter (mm)	Head/Wrench Size (mm)			Recommended Torque Spec (N.m Anti-seize .7 factor)		Recommended Torque Spec (Ft.lb Anti-seize .7 factor)		Recommended Torque Spec (Inch pounds Anti-seize .7 factor)	
	ANSI/ISO	DIN	JIS	Class 8.8	Class 10.9	Class 8.8	Class 10.9	Class 8.8	Class 10.9
5	8	8	8	4.9	6.3	4	5	43	56
6	10	10	10	8.4	11.2	6	8	74	99
8	13	13	12	21	28	15	21	186	248
10	16	17	14	38.5	52.5	28	39	341	465
12	18	19	17	70	94.5	52	70	620	836
14	21	22	19	112	150.5	83	111	991	1332
16	24	24	22	171.5	234.5	126	173	1518	2075
20	30	30	-	336	455	248	336	2974	4027

AFTER-SALES SERVICE/SPARE PARTS LISTS

AFTER-SALES SERVICE

To optimize the service life of the mulcher head, follow the maintenance instructions in the maintenance section of the User Manual to the letter. If spare parts are required, contact your Mongo Attachments distributor and request original parts for your machine. The spare parts are the same as the ones that came with the machine originally, guaranteeing the following:

- Perfect adjustment: The original parts fit the machine perfectly, avoiding any installation or operational problems.
- Optimal performance: The original parts are made with the highest quality materials and with more precise tolerances, which ensure maximum performance and efficiency in your machine.
- Improved durability: The original parts are designed to last longer than imitation parts, which saves money in the long term by reducing maintenance and repair costs.

Remember that it is vitally important to provide the model and serial number to the distributor to ensure that they have the right information to provide the correct part. You can find the model and serial number on the CE nameplate attached to the machine, or from the documentation accompanying your purchase.

For parts, warranty, and service information, please contact your authorized dealer or Mongo Attachments at parts@mongoattachments.com.

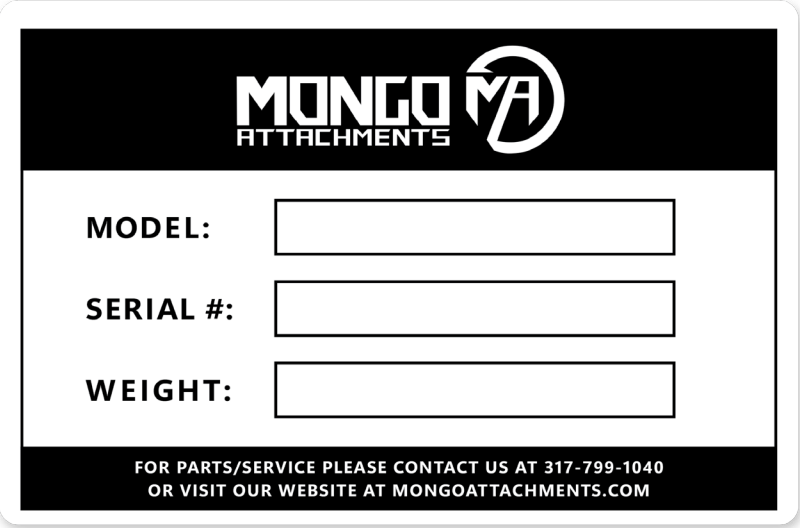

Image 9. *Image of the Mini Pro Hydraulic Mulcher CE nameplate.*

SPARE PARTS LISTS

To obtain the reference numbers for the Mini Pro Hydraulic Mulcher's spare parts, please view the diagrams and tables found on the following pages. If you have any questions, please contact Mongo Attachments for assistance.

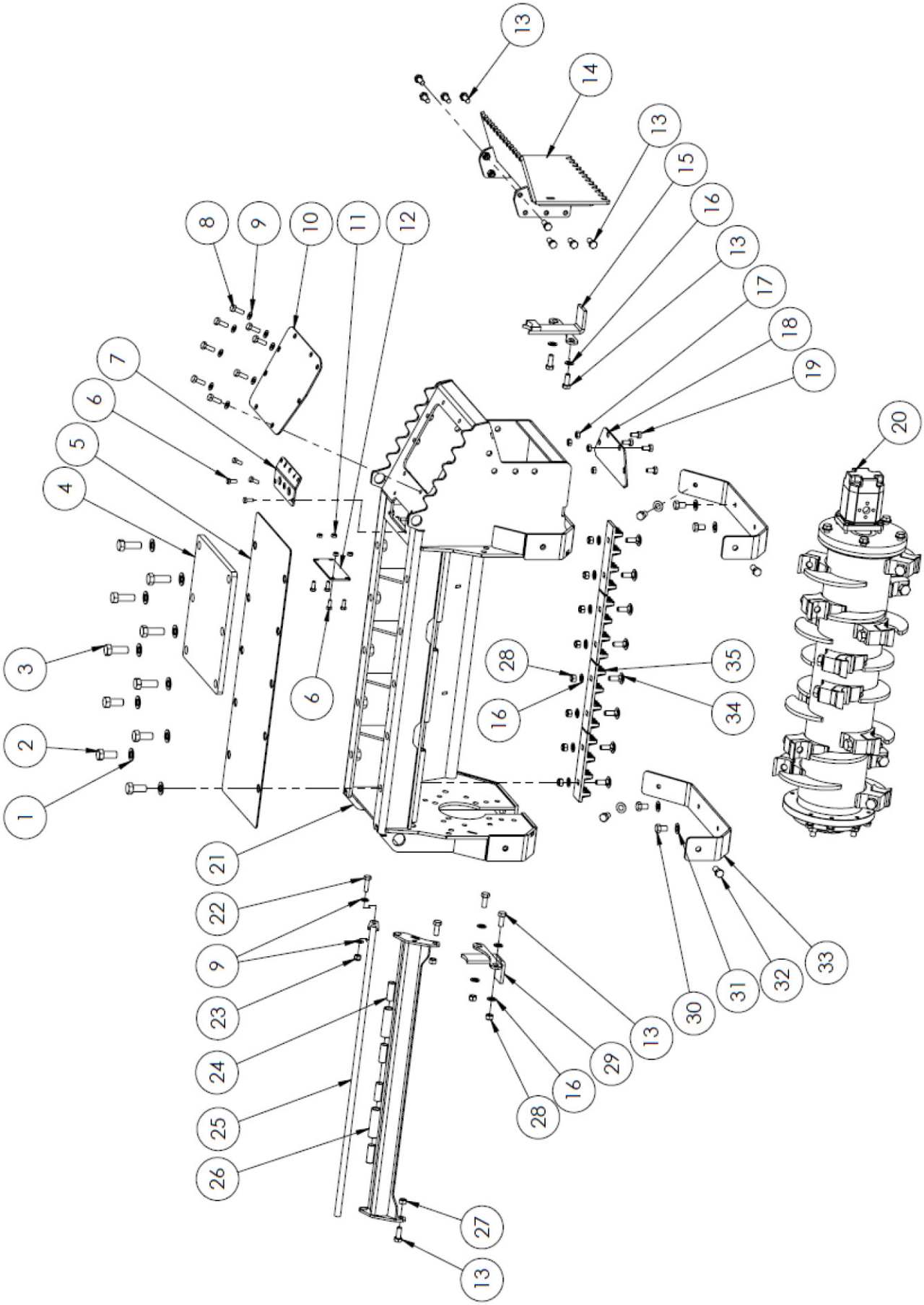
1
2
3
4
5
6
7
8
9
10
11
12
13
14
15
16
17
18
19
20
21
22
23
24
25
26
27
28
29
30
31
32
33
34
35

MULCHER HEAD ASSEMBLY

NO.	PART NUMBER	DESCRIPTION	QTY.
1	MVR111	FLAT WASHER DIN 125 M18	10
2	MCOMTOR933140	HEXAGONAL BOLT FULL THREAD 8.8 M18 x 40	4
3	MCOMTOR933076	HEXAGONAL BOLT FULL THREAD 8.8 M18 x 50	6
4	M191.550-01.00-00	BRACKET PLATE	1
5	M191.580-01.08-01*	UPPER CLOSURE PLATE	1
6	MVR151	HEXAGONAL BOLT FULL THREAD 8.8 M8 x 20	8
7	M191.560-01.00-01	HYDRAULIC CONNECTIONS PLATE	1
8	MCOMTOR933037	HEXAGONAL BOLT FULL THREAD 8.8 M10 x 30	8
9	MVR045	FLAT WASHER DIN 125 M10	10
10	M191.500-01.00-01	MOTOR BOX PLATE	1
11	MCOMTOR934000	HEXAGONAL NUT DIN 934 M8	4
12	M191.570-01.00-00	INNER COVER	1
13	MVR175	HEXAGONAL BOLT FULL THREAD 8.8 M12 x 30	14
14	M191.510-00.00-02	FRONT MOTOR COVER	1
15	M191.530-00.00-00	MOTOR SHAFT COVER	1
16	MVR041	FLAT WASHER DIN 125 M12	14
17	MVR058	HEXAGONAL NUT DIN 934 M10	4
18	M191.500-02.00-00	LOWER MOTOR BOX COVER	4
19	MVR110	HEXAGONAL BOLT FULL THREAD 8.8 M10 x 20	4
20	---	ROTOR ASSEMBLY	1
21	M191.100-00.08-01*	CHASSIS ASSEMBLY	1
22	MCOMTOR933038	HEXAGONAL BOLT FULL THREAD 8.8 M10 x 35	1
23	MVR251	SELF-LOCKING HEXAGONAL NUT DIN 985 M10	1
24	MRECCABVAR041	IGUS BUSHING GSM-1618-50	4
25	M191.540-00.00-00*	DOOR ROD	1
26	M191.110-00.08-00*	DOOR	1
27	MVR164	HEXAGONAL NUT DIN 934 M12	2
28	MDR061	SELF-LOCKING HEXAGONAL NUT DIN 985 M12	10
29	M191.520-00.00-00	MOTOR SHAFT COVER	1
30	MCOMTOR933109	HEXAGONAL BOLT FULL THREAD 8.8 M14 x 20	4
31	MVR043	FLAT WASHER DIN 125 M14	4
32	MCOMTOR933050	HEXAGONAL BOLT FULL THREAD 8.8 M14 x 30	4
33	M191.600-01.00-00	LOWER SLIDE	2
34	MTR1530	SQUARE NECK BOLT FULL THREAD 8.8 M12 x 35	8
35	MTR451	CAST COUNTER-HAMMER	4

* The part number varies according to the working width. See according to model.

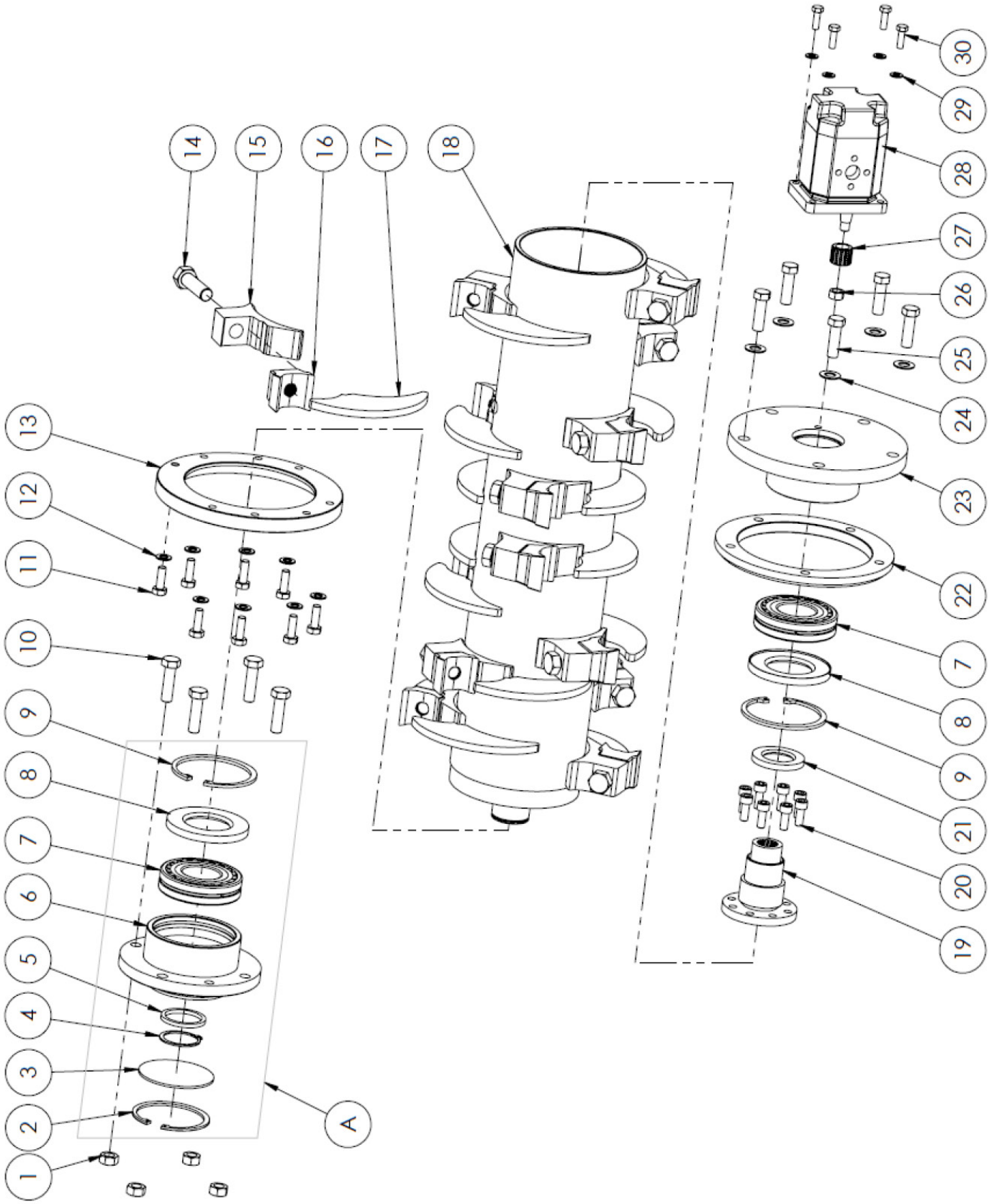
1
2
3
4
5
6
7
8
9
10
11
12
13
14
15
16
17
18
19
20
21
9
8
7
22
23
24
25
26
27
28
29
30
A

ROTOR ASSEMBLY

NUMBER	PART NUMBER	DESCRIPTION	QUANTITY
1	MTR356	HEXAGONAL NUT DIN 985 1/2 SAE	4
2	MTR429	INTERNAL CIRCLIP DIN 472 I-100	1
3	MTR430	HUB CAP 6310	1
4	MTR217	EXTERNAL CIRCLIP DIN 471 E-50	1
5	MTR269	SPACER WASHER 60x50x5	1
6	MTR549	HAMMER SHAFT BUSHING	1
7	MTR718	SPHERICAL ROLLER BEARING	2
8	MTR233	SEAL 60x110x10	2
9	MTR106	INTERNAL CIRCLIP DIN 472 I-110	2
10	MTR355	HEXAGONAL BOLT DIN 931 1/2x45 SAE	4
11	MCOMTOR933037	HEXAGONAL BOLT FULL THREAD 8.8 M10 x 30	8
12	MVR045	FLAT WASHER DIN 125 M10	8
13	M191.320-01.00-00	FLAT WASHER DIN 125 M10	1
14	MTR2130	SAE BOLT 12.9 M3/4" x 63 UNF	S/M
15	M189.311-01.00-00	HAMMER HOLDER F10	S/M
16	MTR2108	FIXED FORESTRY HAMMER F10	S/M
17	M189.310-09.00-00	HAMMER DEFLECTOR	S/M
18	M191.310-00.08-02*	ROTOR	1
19	MKR176	REMOVABLE TIP MOTOR SIDE SHAFT	1
20	MCOMTOR912062	ALLEN BOLT FULL THREAD 8.8 M10 x 25	8
21	MRECTRIRET022	SEAL 40x70x8	1
22	M189.380-01.00-00	INNER ROTOR LUNETTE	1
23	M189.320-01.00-00	INNER HAMMER SHAFT BUSHING 21310	1
24	MVR043	FLAT WASHER DIN 125 M14	5
25	MVR067	HEXAGONAL BOLT FULL THREAD 8.8 M14 x 45	5
26	MCOMTOR934007	HEXAGONAL NUT DIN 934 M12	1
27	MPR038	SEMI-NUDE PINION GROUP2 Z15	1
29	MKR030*2	HYDRAULIC MOTOR	1
30	MVR061	FLAT WASHER DIN 125 M8	4
A	MTR1016	COMPLETE OUTER ROTOR BUSHING	1

* The part number varies according to working width. See according to model. The rotor is always sold complete with holders, hammers, and bolts.

*2 For this motor, there is a seal kit (part number MKR023).

MODEL	HAMMER QTY.
MP060	12
MP080	16